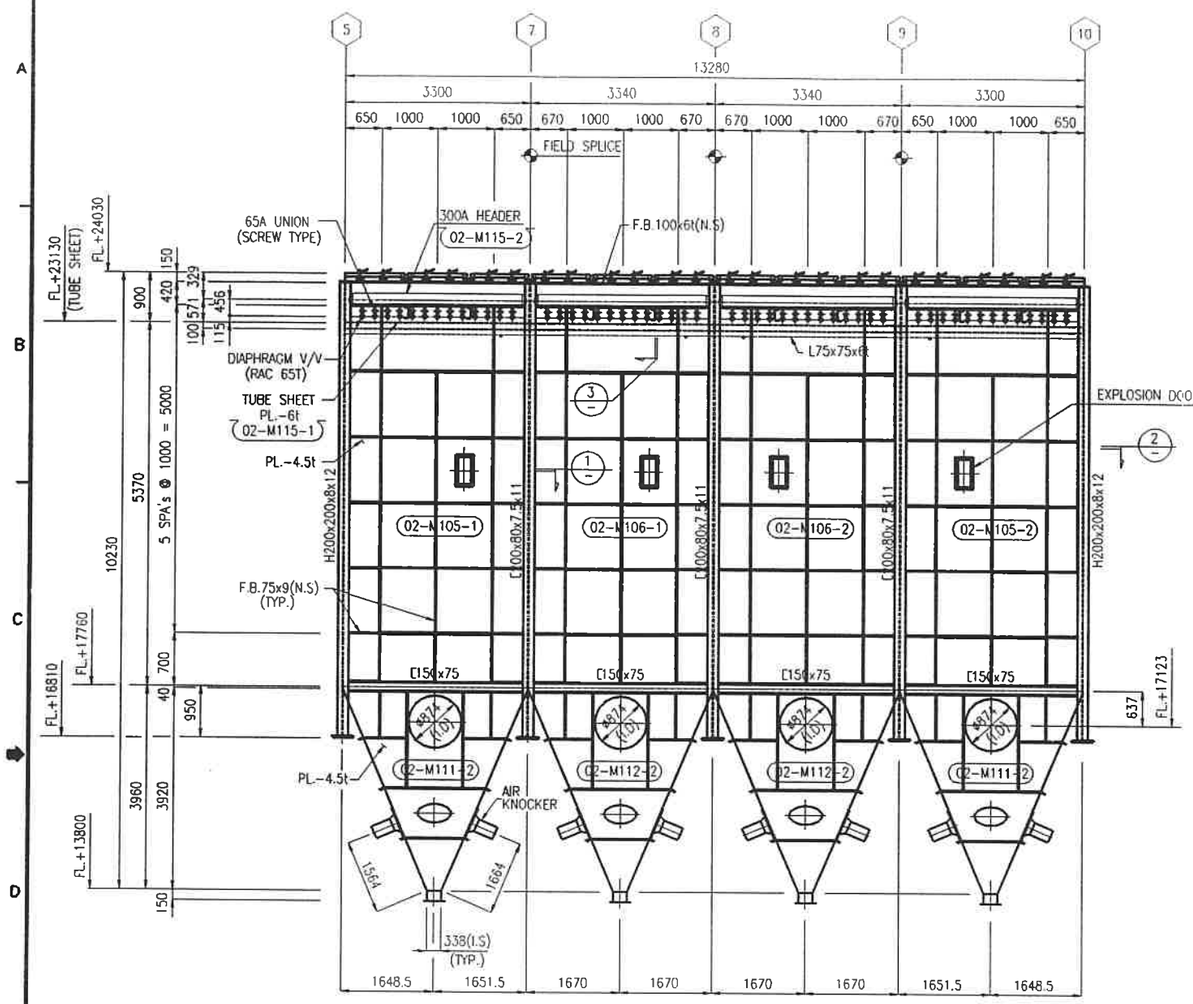

A SIDE ELEVATION

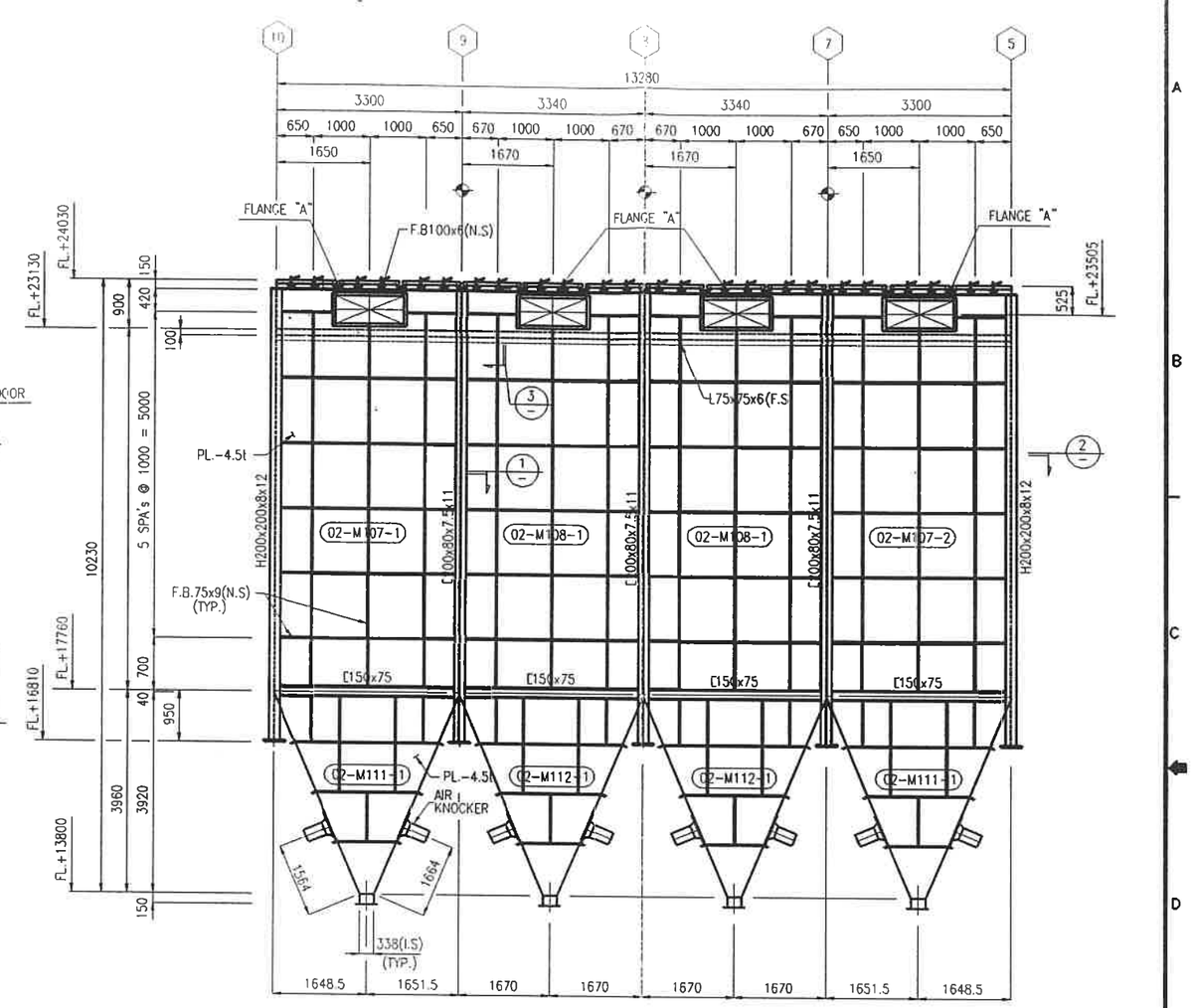

B SIDE ELEVATION

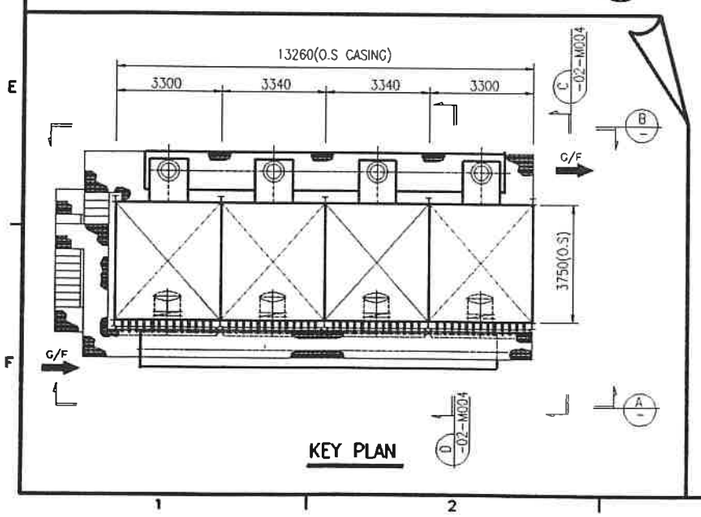

KEY PLAN

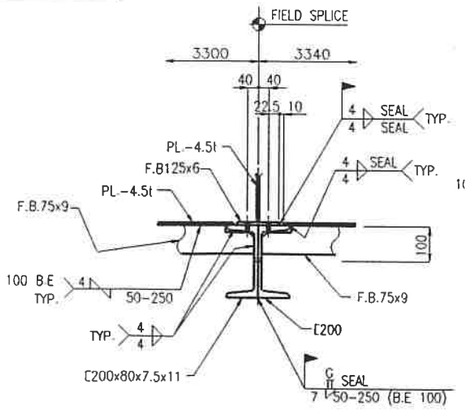

1 SECTION

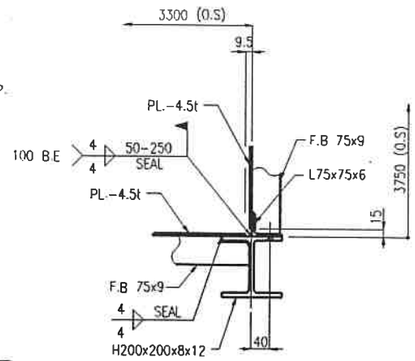

2 SECTION

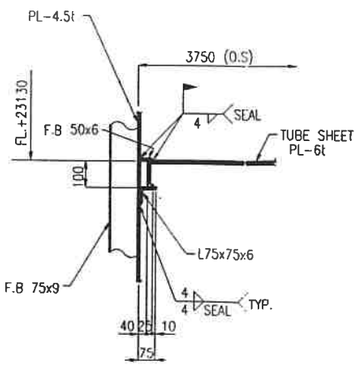

3 SECTION

NO.	DESCRIPTION	DATE	DRN	CK	APPR.
A					

KOREA COTTRELL CO., LTD.

FLUE GAS TREATMENT SYSTEM
HYUNDAI ENGINEERING & CONSTRUCTION CO., LTD.
<KUNPO MSW INCINERATION PLANT>

SIDE ELEVATION

DRWN : S. S. L	" : 98. 12.21	SCALE : NONE	REV. NO.
CHKD : S. J. S	" : 98. 12.21	GPMV-02-M003	A
APPR. : S. G. C	" : 98. 12.21		

A3(297x420 m/m)